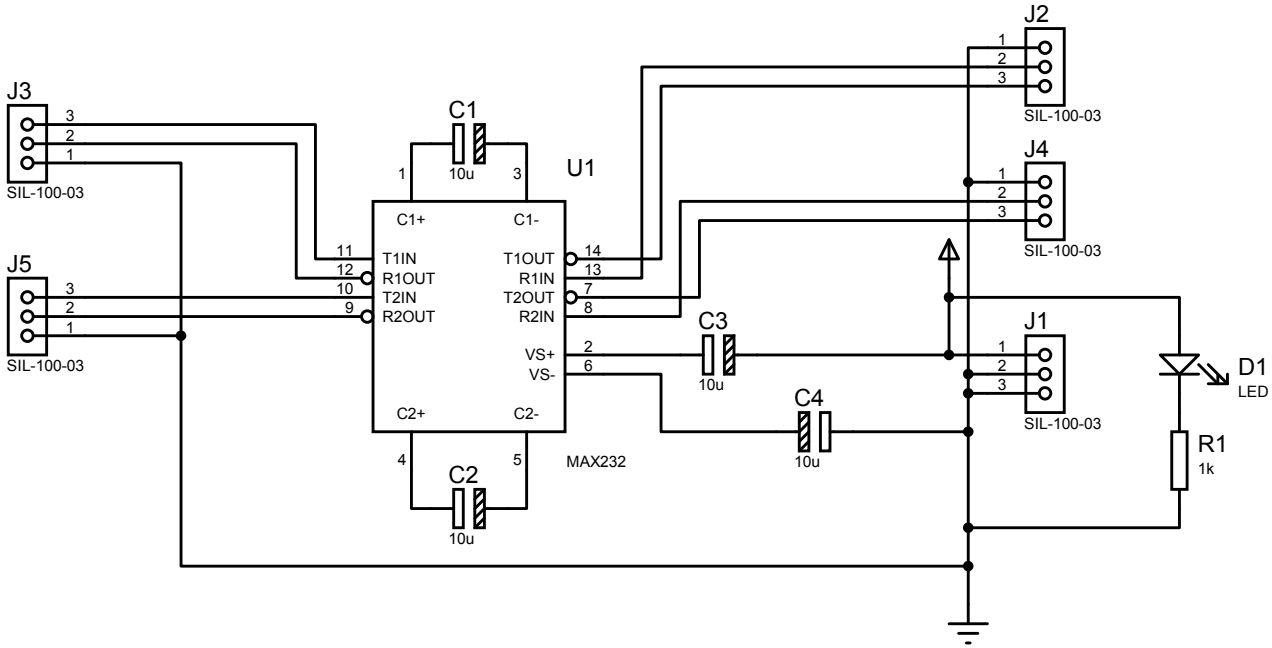
J3
SIL-100-03
J5
SIL-100-03
C1
10u
C2
10u
U1
C1+
C1-
T1IN
R1OUT
T2IN
R2OUT
T1OUT
R1IN
T2OUT
R2IN
VS+
VS-
C2+
C2-
MAX232
C3
10u
C4
10u
J2
SIL-100-03
J4
SIL-100-03
J1
SIL-100-03
D1
LED
R1
1k